3RG INDUSTRIAL

ORIGINAL PRODUCTS 3RG SPAIN

NOVEDADES
NOUVEAUX ARTICLES
NEW ITEMS

JUNIO / JUIN / JUNE 2018

SUPLEMENTO AL CATÁLOGO
SUPPLÉMENT AU CATALOGUE
ADDITIONAL TO THE CATALOGUE

Ref.: 3RG: 23501
Ref.: O.E: 2E0711475B

∅ **10 mm. - Long: 70 mm.**

MERCEDES: Vito (W639), Sprinter (906)
VOLKSWAGEN: Crafter

BIELETA CAMBIO DE VELOCIDAD
BIELLETTE LEVIER VITESSES
GEAR LINK

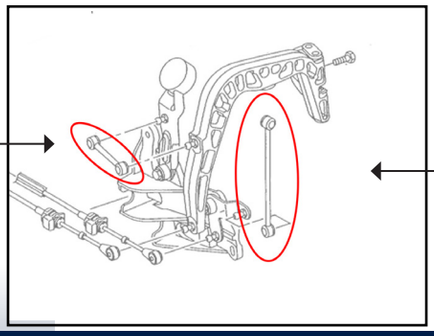

Ref.: 3RG: 23500
Ref.: O.E: 2E0711475A

∅ **9,17 mm. - Long: 153,65 mm.**

MERCEDES: Vito (W639), Sprinter (906)
VOLKSWAGEN: Crafter

BIELETA CAMBIO DE VELOCIDAD
BIELLETTE LEVIER VITESSES
GEAR LINK

Ref.: 3RG: 40472
Ref.: O.E: 5684137, 24459803

Gasolina / Essence / Gasoline

OPEL: Astra H, Meriva B, Zafira B

SOPORTE MOTOR
SUPPORT MOTEUR
ENGINE MOUNTING

Ref.: 3RG: 41402
Ref.: O.E: 5684130

Diesel

OPEL: Astra H, Meriva B, Zafira B

SOPORTE MOTOR
SUPPORT MOTEUR
ENGINE MOUNTING

Ref.: 3RG: 45504
Ref.: O.E: 1683200073, 1683230085

MERCEDES: Clase A (W168), Vaneo (414)

KIT REPARACION SOPORTE DE AMORTIGUADOR
KIT DE RÉPARATION SUPPORT AMORTISSEUR
REPAIR KIT SUPPORT SHOCK ABSORBER

3RG INDUSTRIAL

NOVEDADES
NOUVEAUX ARTICLES
NEW ITEMS

Ref.: 3RG: 26702
Ref.: O.E: 1J0711251

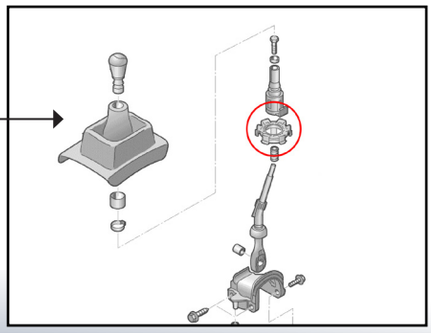

AUDI: A3 (8L1)
SEAT: Leon (1M1), Toledo II (1M2)
SKODA: Octavia I (1U2) Octavia Combi (1U5)
VOLKSWAGEN: Bora (1J2) Golf IV (1J1, 1J5)

CASQUILLO DE PALANCA
COUSSUINET LEVIER VITESSE
LEVEL BEARING

Ref.: 3RG: 45766
Ref.: O.E: 3C0513353C

AUDI: A1, A3 (8PA), A3 Sportback, Q3, TT
SEAT: Alhambra
SKODA: Octavia II (1Z3) **,** Ocatvia Combi (1Z5), SuperB II (3T4, 3T4) , Yeti (5L)
VOLKSWAGEN: Golf V, VI, Passat (3C2, 3C5), Passat CC (357), Scirocco (137, 138), Sharan (7N1, 7N2), Tiguan (5N), Touran (1T1, 1T2), Passat (362), CC (358)

SOPORTE AMORTIGUADOR
ROULEMENT AMORTISSEUR
SHOCK ABSORBER BEARING

Ref.: 3RG: 81600
Ref.: O.E: 8200267349

89 º C / 4 Pin

AUDI: 100
NISSAN: Almera II, Micra III, Qashqai
RENAULT: Avantime, Clio I, II, III, Espace III, IV , Scenic I, II, III, Grand Scenic II, Kangoo, Kangoo Express, Laguna I, II, Logan I, Master II, Megane I, II, III, Modus, Grand Modus, Twingo II, Vel Satis,
SUZUKI: jimny

CAJA TERMOSTATO COMPLETA
COUVERTE THERMOSTAT
THERMOSTAT COVER

Ref.: 3RG: 81685
Ref.: O.E: 110605536R

83 º C / 2 Pin

NISSAN: Cube, Juke, Micra III, Note, Pulsar, Qashqai, Tiida, NV200
RENAULT: Captur, Clio III, IV, Clio Grand-tour, Fluence, Megane III, Twingo II
DACIA: Dokker, Duster, Logan II, Logan MCV II, Lodgy, Sandero II

CAJA TERMOSTATO COMPLETA
COUVERTE THERMOSTAT
THERMOSTAT COVER

Ref.: 3RG: 83238

∅ 12 x 18 - 16 mm.

CITROËN: 2cv, Dyane 6

CASQUILLO CIGÜEÑAL
BAGUE DE VILLEBREQUIN
CRANK SPIGOT BUSH

3RG INDUSTRIAL

ORIGINAL PRODUCTS 3RG SPAIN

YA DISPONIBLES
DÉJA DISPONIBLE
NOW AVAILABLE

JUNIO / JUIN / JUNE 2018

DISPONIBLES EN CATÁLOGO
DISPONIBLE AU CATALOGUE
AVAILABLE IN CATALOGUE

Ref.: 3RG: 24232
Ref.: O.E: 240511 + 241125

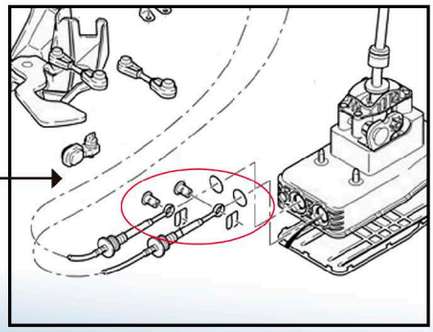

CITROËN: C5, Xsara Picasso

KIT PALANCA CAMBIO CABLE MANDO
KIT LEVIER VITESSES DE CABLES
HAND LEVEL CABLE BUSHES KIT

Ref.: 3RG: 41630
Ref.: O.E: 8200131305

NISSAN: Micra III, Note
RENAULT: Clio III, Clio Grandtour, Modus, Grand Modus

SOPORTE MOTOR DERECHO
SUPPORT MOTEUR DROIT
RIGHT ENGINE MOUNTING

Ref.: 3RG: 24796
Ref.: O.E: 701711699

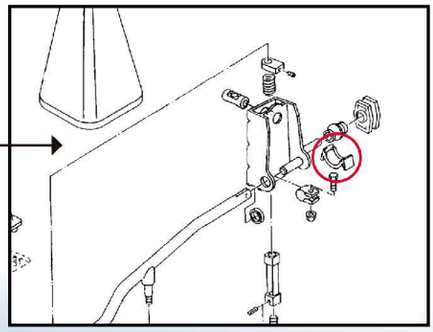

VOLKSWAGEN: Transporter (91-94)

CASQUILLO PALANCA CAMBIO
BAGUE LEVIER VITESSE
HAND LEVEL RING