3RG INDUSTRIAL

CLASSICS VOLKSWAGEN

3RG: 10709
O.E.: 068105255

VW: Golf I, II

Ø 126 x 30 **mm**

3RG: 10721
O.E.: 049105263C

AUDI: 100 C2, 100 C3, 100 C4, 80 B2, 80 B3, 80 B4, A4 B5, A6 C4, Cabriolet B3, Coupe B3
SEAT: Alhambra, Cordoba, Ibiza II, Inca, Toledo I
VW: Caddy II, Golf II, III, Jetta I, II, Passat B1, B2, B3/B4, B5, Polo III Classic, Polo, Sharan, Transporter IV, Vento

Ø 65 x 20,5 mm

3RG: 10723
O.E.: 049109111C

AUDI: 100 C2, 100 C3, 100 C4, 200 C2, 200 C3, 50, 80 B1, 80 B2, 80 B3, 80 B4, 90 B2, 90 B3, A4 B5, A6 C4, Cabriolet B3, Coupe B2, Coupe B3
SEAT: Alhambra, Cordoba, Ibiza II, Inca, Toledo I **VW:** Caddy I, II, Corrado, Derby, Golf I, II, III, IV, Van III, Iltis, Jetta I, II, LT28-35 I, LT 40-55 I, Passat B1, B2, B3/B4, B5, Polo, II, III Classic, Santana, Scirocco, Sharan, Transporter

Ø 132 x 21,5 mm

3RG: 10731
O.E.: 026105255

AUDI: 100
SEAT: Toledo I
VW: Golf II, Jetta II, Passat

Ø 126 x 30 mm

3RG: 13711
O.E.: 026109243L

AUDI: 100 C2, 100 C2, 100 C3, 80 B1, 80 B2, 80 B3, 80 B4, 90 B3, Coupe B2, B3
SEAT: Alham,bra, Cordoba, Ibiza II, Inca, Toledo I
VW: Caddy I, II, Corrado, Golf I, II, III, IV, Golf Van III, Iltis, Jetta I, II, LT 28-35 I, 40-55 I, Passat B1, B2, B3/B4, Polo III Classic, Polo, Santana, Scirocco, Sharan, Transporter IV, Vento
PORCHE: 924

Ø 72 x 20,4 mm

3RG: 13721
O.E.: 068109243F

AUDI: 80 B2, 80 B3, 80 B4, 90 B3
SEAT: Cordoba, Ibiza II, Toledo I
VW: Caddy I, Golf I, II, III, Iltis, Jetta I, II, Passat B1, B2, B3/B4, Santana, Transporter III, IV, Vento

Ø 72 x 30 mm

3RG: 13730
O.E.: 069109111

AUDI: 100 C2, 100 C3, 100 C4, 80 B2, 80 B3, 80 B4, A4 B5, A6 C4, A6 C5
SEAT: Alhambra, Cordoba, Ibiza II, Inca, Toledo I
SKODA: Felicia I, II
VW: Caddy II, Golf I, II, III, Jetta I, II, LT 28-35 I, II, LT 28-46 II, LT 40-55 I, Lupo I, Passat B2, B3/B4, B5, Polo, Polo III, Polo III Classic, Sharan, Transporter III, IV, Vento **VOLVO:** S80 I, V70 I, II

Ø 132 x 24,5 mm

3RG: 13731
O.E.: 028105263E

AUDI: 80 B2, 80 B3, 80 B4
SEAT: Cordoba, Ibiza II, Inca, Toledo I
VW: Caddy I, II, Golf I, II, III, Jetta I, II, Passat B1, B2, B3,/B4, Transporter III, IV, Vento

Ø 65 x 30 mm

3RG: 13733
O.E.: 030105263C

SEAT: Arosa, Cordoba, Ibiza II, Inca
SKODA: Felicia I, Octavia I
VW: Caddy II, Golf II, III, IV, Jetta II, Polo Classic, Polo, II, III, III Classic, Polo, Vento

Ø 64,5 x 23 mm

3RG: 13735
O.E.: 030115105E

SEAT: Cordoba, Ibiza II
VW: Golf II, III, Jetta II, Polo Classic, Polo, II, Vento

Ø 13,5 x 100 mm

3RG: 22707
O.E.: 02K141709A

AUDI: A3
SEAT: Cordoba, Ibiza II, Inca, Leon, Toledo I, Toledo II
SKODA: Octavia I
VW: Bora I, Bora, Caddy II, Golf I, Golf II, Golf III, Golf IV, Jeta I, Jeta II, Polo III Classic, Polo, Vento

3RG: 22708
O.E.: 02K141709A

AUDI: A3
SEAT: Cordoba, Ibiza II, Inca, Leon, Toledo I, Toledo II
SKODA: Octavia I
VW: Bora I, Bora, Caddy II, Golf I, Golf II, Golf III, Golf IV, Jeta I, Jeta II, Polo III Classic, Polo, Vento

3RG: 24704
O.E.: 020141741B

L 341 mm

AUDI: A3
SEAT: Cordoba, Ibiza II, Inca, Leon, Toledo I, II
SKODA: Octavia I
VW: Bora, I, Caddy II, Golf III, IV, Polo III Classic, Polo, Vento

3RG: 24703
O.E.: 020141741

L 311 mm

VW: Golf I, II

3RG: 24722
O.E.: 171721308

VW: Golf I, Golf II, Jetta I, Jetta II

ORIGINAL PRODUCTS 3RG SPAIN

3RG: 24750
O.E.: 191721559

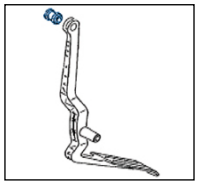

VW: Corrado, Golf II, Jetta II, Passat B3/B4, Transporter IV

3RG: 70701
O.E.: 431253149A

AUDI: 100 C2, 100 C3, 200 C2, 200 C3, 80 B2, 90 B2, Coupe B2
SEAT: Toledo I
VW: Corrado, Derby, Golf II, Jetta II, Passat B2, Polo, Polo Classic, Polo II

3RG: 70702
O.E.: 823253147A

AUDI: 100 C2, 100 C3, 100 C4, A6 C4
SKODA: Felicia I, II
VW: Golf II, Jetta II, Passat B2, Polo Classic, Polo, II

3RG: 70703
O.E.: 171253147A

AUDI: 80 B3, 80 B4, 90 B3
SEAT: Toledo I
VW: Golf II, Jetta II, Transporter IV

3RG: 70704
O.E.: 176253147

SEAT: Toledo II
VW: Golf II, Jetta II, Polo Classic, Polo, II

3RG: 72700
O.E.: 191298115

SEAT: Toledo I
VW: Golf I, II, Jetta I, II, Passat B3/B4, Transporter IV

3RG: 24786
O.E.: 171798105

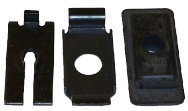

VW: Golf I, Golf II, Jetta I, Jetta II

3RG: 71302
O.E.: 1013505

ALFA ROMEO: 145, 146, 155, 164, 33, Spider
AUDI: 100 C3, A4 B5
AUTOBIANCHI: Y10
DAEWOO: Matiz
FIAT: Cinquecento, Coupe, Croma, Panda, Punto, Regata , Ritmo, Seicento/600, Tempra SW, Tipo, Uno
LANCIA: Dedra, Dedra SW, Delta II, Thema, Thema SW, Y, Y10
SAAB: 900 I
SEAT: Leon
VW: Bora I, Caddy I, Golf I, II, IV, Jetta I, LT 28-35 I, LT 40-55 I, New Beetle, Passat B2, B5, Santana, Scirocco, Transporter III, IV

3RG: 71702
O.E.: 843253115

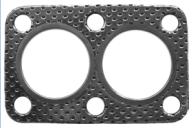

AUDI: 100 C2, 100 C3, 80 B1, 80 B2, Coupe B2
VW: Golf I, Iltis, Jetta I, Passat B1, B2, Sanatana, Scirocco

3RG: 40700
O.E.: 171199214C

VW: Caddy I, Golf I, Jetta I, Scirocco

3RG: 40701
O.E.: 171199214G

VW: Caddy I, Golf I, Jetta I

3RG: 40702
O.E.: 171199214F

VW: Caddy I, Golf I, Jetta I

3RG: 40703
O.E.: 171199339

VW: Golf I, Jetta I

3RG: 40704
O.E.: 171399151B

VW: Golf I, Jetta I

ORIGINAL PRODUCTS 3RG SPAIN

3RG: 40717
O.E.: 357199381A

SEAT: Cordoba, Ibiza II, Toledo I; VW: Caddy II, Corrado, Golf II, III, IV, Passat B3/B4, Polo III Classic

3RG: 40718
O.E.: 191199381A

SEAT: Cordoba, Ibiza II, Toledo I; VW: Caddy II, Golf II, III, Jetta II, Polo III Classic, Vento

3RG: 40719
O.E.: 191199279C

SEAT: Toledo I: VW: Golf II, Jetta II, Passat B3/B4

3RG: 40722
O.E.: 191199402A

VW: Golf II, Jetta II

3RG: 40725
O.E.: 191199262A

SEAT:Toledo I; VW: Golf II, Jetta II, Passat B3/B4

3RG: 40764
O.E.: 191199279E

SEAT: Toledo I; VW: Golf II, Jetta II, Passat B3/B4

3RG: 42700
O.E.: 026129761E

AUDI: 100 C3, 80 B2
VW: Golf II, Jetta II, Passat B2, Santana

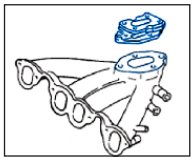

3RG: 42704
O.E.: 052129765E

VW: Golf II, Jetta II, Polo Classic, Polo, II

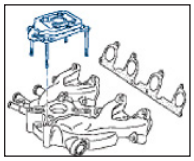

3RG: 42707
O.E.: 050129761A

AUDI: 100 C3, 80 B3, 80 B4,
SEAT: Cordoba, Ibiza II, Inca, Toledo I
VW: Caddy II, Golf II, III, Jetta II, Passat B3/B4, Polo III Classic, Vento

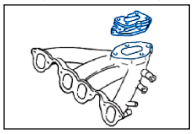

3RG: 80762
O.E.: 171957821B

SEAT: Toledo I
VW: Golf I, II, Jetta I, II

3RG: 80763
O.E.:171957821

VW: Golf I, II, Jetta I, II

3RG: 80738
O.E.: 357121140

VW: Passat B3/B4

3RG: 81722
O.E.: 044121113

AUDI: 100 C2, 100 C3, 100 C4, 80 B1, 80 B2, 80 B3, 80 B4, A2, A3, A4 B5, A4 B6, A4 B7, A6 C4, A6 C5, Cabriolet B3, Coupe B2, B3
FORD: Escort IV, Fiesta II, Galaxy I, Orion II
SEAT: Alhambra, Altea, Altea XL, Arosa, Cordoba, Ibiza II, III, IV, IV SC, Inca, Leon, Toledo I, II, III
SKODA: Fabia I, Fabia II, Octavia I, II,Roomster, Superb I, II
VW: Bora I, Bora, Caddy I, II, III, Corrado, Fox, Golf I, II, III, IV, V, Golf Plus V, IItis, Jetta I, II, III, Lupo I, Multivan V, New Beetle, Passat B1, B2, B3/B4, B5, B5.5, B6, Polo, III, III Classic, IV, Santana, Scirocco, Sharan, Touran, Transporter III, IV, V, Vento

3RG: 81726
O.E.: 191881671

SEAT: Toeldo I
VW: Corrado, Derby, Golf I, II, Jetta II, Passat B2, Polo Classic, Polo, II, Santana, Scirocco

ORIGINAL PRODUCTS 3RG SPAIN

3RG: 80702
O.E.: 443133741A

M6x1 - Ø 24- L12 mm

AUDI: 100 C2, 100 C3, 100 C4, 200 C2, 200 C3, 80 B1, 80 B2, 80 B3, 80 B4, 90 B2, 90 B3, A2, A4 B5, A6 C4, A6 C5, A8 D2, Cabriolet B3, Coupe B2, B3, Quattro **SEAT:** Alhambra, Arosa **VW:** 181, Caddy I, Corrado, Derby, Golf I, II, III, Jetta I, II, K70, Kaefer, Karmann, LT 28-35 I, II, LT 28-46 II, Lupo I, Passat B2, B3/B4, B5, Santana, Scirocco, Sharan, Touareg

3RG: 80703
O.E.: 171121275E

M6x1 - Ø 27- L14 mm

AUDI: 100 C2, 200 C2, 50, 890 B1
VW: Caddy I, Derby, Golf I, Jetta I, Passat B1, B2, Polo, Polo II, Scirocco, Touareg

3RG: 80700
O.E.: 191201256

M6 x 1 - Ø19 - L15 mm

AUDI: V8
NISSAN: Urvan
SEAT: Alhambra, Toledo I
VW: Corrado, Derby, Golf I, II, Jetta II, LT 28-35 I, LT 40-55 I, Passat B3/B4, Polo Classic, Polo, Polo II, Sharan, Transporter IV

3RG: 80722
O.E.: 113301155

Ø int.11-Ø ext.13,6-L14

AUDI: A3
SEAT: Alhambra, Cordoba, Ibiza II, Leon, Toledo I, II
SKODA: Octavia I
VW: Bora I, Golf I, II, III, IV, Jetta I, II, New Beetle, Passat B3/B4, Polo III Classic, Polo, Shatan, Transporter III, IV, Vento

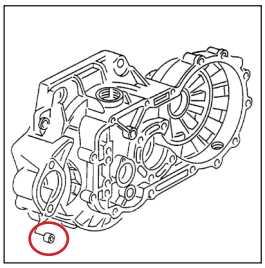

3RG: 81723
O.E.: 443201551S

AUDI: 100 C2, 100 C3, 100 C4, 200 C2, 200 C3, 80 B2, 90 B2, 90 B3, Coupe B2, Quattro, V8
VW: Corrado, Goplf I, Jetta I, Passat B2, B3/B4, Scirocco

3RG: 80800
O.E.: 020301215C

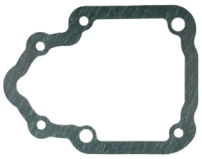

SEAT: Cordoba, Ibiza II, Toledo I
VW: Golf I, II, III, Jetta I, II, Polo III Classic, Polo, Vento

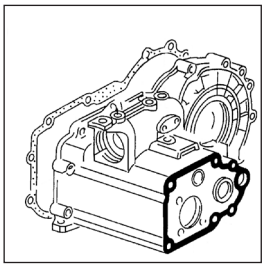

3RG: 81795
O.E.: 027115611C

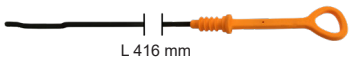

L 416 mm

SEAT: Alhambra,Cordoba, Toledo I
VW: Caddy II, Golf I,II, III, Jetta I, II, New Beetle, Passat B3/B4, Polo II Classic, Polo, Sharan, Vento

3RG: 80755
O.E.: 1H0121321A

SEAT: Alhambra, Cordoba, Ibiza II, Toledo I
VW: Golf II, III, Jetta II, Passat, Polo, Polo Classic, Vento, Transporte IV

3RG: 80753
O.E.: 443121321

AUDI: A2, A3, A4, A4 Avant, A6, A6 Avant, Q7, TT
PORSCHE: Cayenne
VW: Bora, Golf IV, Passat, Polo, Touareg

3RG: 81725
O.E.: 191201553A

AUDI: 80, 90, Coupe, 100, A3, A4, A4 Avant, A6, A6 Avant, A8, TT, TT Roadster
SEAT: Coroda, Ibiza II, Toledo
VW: Golf II, III, IV, Jetta, Vento, Bora, Passat, Polo III
OPEL: Astra G, H, Zafira A, B, Corsa B, C, Tigra A, B, Combo, Combo Tour, Meriva A, Omega B, Vectra B, C, Signum
SAAB: 9-3

3RG: 80749
O.E.: 06B103485C

AUDI: A3, A4, A4 Avant, A6, A6 Avant, V8, A8, TT, 50, 80, 80 Avant, 90, Coupe, Quattro, 100, 100 Avant, 200, 200 Avant
FORD: Galaxy
SEAT: Alhambra, Arosa, Cordoba, Ibiza I, II, Inca, Leon, Toledo I, II
SKODA: Fabia I, Felicia I, II, Octavia I, II, Superb I
VOLVO: S70, S80, V70 I, II, 850
VW: Bora, Caddy I, II, Corrado, Golf I, II, III, IV, V, Jetta I, II, Escarabajo, Lupo, Passat, Polo, Polo Classic, Santana, Scirocco, Sharan, Vento, LT, Transporter II, III

3RG: 80721
O.E.: 321831421

Ø 8 - L 39 mm

SEAT: Toledo I
VW: Caddy I, Corrado, Golf I, II, Jetta I, II, Passat B2, Polo Classic, Polo, II, Santana, Scirocco, Transporter III, IV

ORIGINAL PRODUCTS 3RG SPAIN

3RG: 88101
O.E.: 67128377430

AUDI: A2, A4
SEAT: Cordoba, Ibiza II, Toledo II
SKODA: Ocatavia I
VW: Bora, Caddy II, Golf IV, LT 28-35 II, LT 28-46 II, New Beetle, Passat, Polo, III, Sharan, Transporter IV
BMW: Serie 3 (E36, E46, E90), Serie 5 (E39), Serie 7 (E38), X5 (E53), Z8 (E52)
FORD: Galaxy I

3RG: 88709
O.E.: 333955651 + 61661365657

VW: Golf II, Passat B3/B4, Polo II, Polo Classic, Polo Coupé, Transporter IV
OPEL: Astra F, Calibra A, Combo, Corsa A, Corsa B, Kadette E, Kadette E Combo, Omega B, Tigra, Vectra A,

3RG: 88710
O.E.: 431955651 + 61661365657

AUDI: A6 C4, 80 B1, 80 B2, 80 B3, 80 B4, 90 B2, 90 B3, 100 C2, 100 C3, 100 C4 **VW:** Golf I, Golf II, Jetta I, Jetta II, Passat B1, Passat B2, Passat B3/B4, Polo, Polo II, Polo Classic, Polo Coupé, LT 28-35 I,II, 40-55 I,28-46 II, Transporter III, IV **FORD:** Transit, Transit Tourneo **FIAT:** Doblo, Marea, Palio, Punto, Ducato
ALFA ROMEO: 156, GT, GTV, Spider **LANCIA:** Lybra, Thesis

3RG: 90700
O.E.: 443698671

AUDI:100 C3, 200 C3, 80 B2, 80 B3, 90 B2, 90 B3, Coupe B2, Quattro
JAGUAR: XJ
VW: Golf II, Jetta II, Passat B2, Scirocco

3RG: 83036
O.E.: 2014010270

Ø 12 x 1,5 - L 40 mm

AUDI: A5
VW: Golf I, Jetta, Scirocco, Passat, Polo
MERCEDES: 190, Cabriolet, Clase C, Clase A, Clase CLC, Clase E, Clase S, Clase CLK, Coupe, Kombi, Sedan, SL, SLK, Vaneo

3RG: 83037
O.E.: 3A0601139

Ø 12 x 1.5 - L 45,5 mm

SEAT: Arosa, Cordoba, Ibiza II, III, Inca, Toledo
VW: Golf I, II, III, Jetta, Scirocco, Vento, Passat, Polo II, III, IV, Lupo, Polo, Classic, Caddy

3RG: 91700
O.E.: 171698471B

Ø48

SEAT: Arosa, Cordoba, Ibiza II, Toledo I
SKODA: Fabia I, II
VW: Amarok, Fox, Golf I, II, III, IV, Jetta I, II, IV, Lupo I, Passat B2, Polo, II, III, III Classic, Scirocco, Vento

3RG: 85705
O.E.: 068117021B

AUDI: A2, A3, A4 B5, A4 B6, A4 B7, A6 C4, A6 C5, A8 D2, TT, 80 B2, Coupe B2, 80 B3, Coupe B3, Cabriolet B3, 80 B4, 100 C4
SEAT: Alhambra, Altea, Altea XL, Arosa, Cordoba, Ibiz II, Ibiza III, Inca, Leon, Toledo I, Toledo II
SKODA: Fabia I, Felicia I, Felicia II, Octavia I, Superbl
VW: Bora I, Bora, Caddy I, Caddy II, Corrado, Golf I, Golf II, Golf III, Golf IV, Jetta I, Jetta II, Lupo I, New Beetle, Passat B2, Passat B3/B4, Passat B5, Polo III, Polo III Classic, Polo, Santana, Scirocco, Sharan, Vento, Crafter 30-35, Crafter 30-50, LT 28-35 I, LT 40-55 I, LT 28-35 II, LT 28-46 II, Transporter III, Transporter IV, Transporter V
FORD: Galaxy I
MERCEDES: Clase V

3RG: 90701
O.E.: 8D0698671

Ø 38

AUDI: 100 C3, 100 C4, 200 C3, 80 B3, 80 B4, 90 B3, A1, A2, A3, A4 B5, A4 B6, A4 B7, A6 C4, A6 C5, A8 D2, Cabriolet B3, Coupe B2, B3, TT
SEAT: Alhambra, Altea, Altea XL, Cordoba, Exeo, Exeo ST, Ibiza II, III, IV ST, Leon, Toledo I, II, II, IV
SKODA: Fabia I, II, Octavia I, II, III, Rapid, Roomster, Superb I, Yeti
VW: Bora, I, Caddy III, Corrado, Eos, Golf II, III, IV, V, VI, Golf Plus V, Jetta II, New Beetle, Passat B3/B4, B5, B5.5, B6, CC B6, Polo, III, III Classic, V, Scirocco III, Sharan, Transporter IV, Vento
FORD: Galaxy I
JAGUAR: XK II
VOLVO: S40 I, V40

3RG: 80709
O.E.: 028103500

Ø int. 17 - Ø ext. 26 - L4,5 mm

AUDI: 100 C2, 100 C3, 100 C4, 80 B2, 80 B3, 80 B4, A3, A4 B5, A6 C4, A6 C5, Cabriolet B3 **FORD:** Galaxy I
SEAT: Alhambra, Arosa, Cordoba, Ibiza II, III, Inca, Leon, Toledo I, II
SKODA: Fabia I, Felicia I, II, Octavia I **VW:** Bora, I, Caddy II, Corrado, Golf I, II, II, IV, Iltis, Jetta I, II, LT 28-35 I, LT 28-46 II, LT 40-55 I, Lupo I, New Beetle, Passat B2, B3/B4, B5, Polo, III, III Classic, IV, Sharan, Transporter III, IV, Vento

3RG: 80723
O.E.: 014301155

Ø int.12,1- Ø ext.14,1 - L13,9 mm

AUDI: 100 C1, 100 C2, 100 C3, 50, 80 B1, 90 B2, A2, A3, TT, Coupe B2 **SEAT:** Alhambra, Arosa, Cordoba, Ibiza II, Inca, Toledo I
SKODA: Felicia I, Octavia I **VW:** Bora, I, Corrado, Derby , Golf I, II, III, IV, Jetta I, II, LT 28-35 I, LT 40-55 I, Lupo I, Passat B1, B2, B3/B4, Polo, Polo Classic, Polo II, III, III Classic, Santana, Sharan, Transporter IV, Vento **BMW:** 3, 5 **FIAT:** Croma, Fiorino, Panda, Punto, Tipo, Uno
MERCEDES: 123, 124, 190, Clase C, E, G, S, Coupe, SL, T1, T2, Heckflosse **OPEL:** Astra F, G, Claibra A, Commodore C, Frontera A, Kadett C, D, E, Manta A, B, B CC, Monza A, Omega A, B, Rekord, Senator B, Vectra A, B **PEUGEOT:** 205, I, II, 309 I, II, 405 II
SAAB: 9-3, 900 I, II, 9000

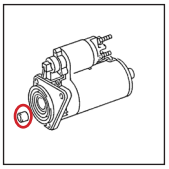

3RG: 82784
O.E.: 191127247A

AUDI: 100 C3, 100 C4, 80 B2, 80 B3, 80 B4, A5 B5, A6 C4, A6 C5
FORD: Galaxy I
SEAT: Alhambra, Cordoba, Ibiza II, Inca, Toledo I
SKODA: Felicia I, II
VW: Caddy II, Golf I, II, III, LT 28-35 I, LT 40-55 I, Passat B2, B3/B4, B5, Polo III Classic, Polo, II, III, Sharan, Transporter III, IV

ORIGINAL PRODUCTS 3RG SPAIN

3RG: 83011
O.E.: 652475

AUDI: A4 B5, A6 C4, A6 C5, 80 B1, 80 B2, 80 B3, 80 B4, 90 B2, 90 B3, 100 C2, 100 C3, 100 C4 **BEDFORD:** Blitz **FORD:** Capri I, II, III, Consul, Escort,I, II, III, IV, V, VI, Fiesta I,II, III, IV, Focus C-Max, Galaxy I, KA, KA Van, Mondeo I, II, Orion II, III, P 100 II, Scorpio I, II, Sierra I, II, Taunus, III, V, Econovan, Transit **OPEL:** Ascona C, AstraF, G, Calibra A, Combo, Corsa A, A TR, B, C, Frontera A, B, Kadette E, Omega A, Omega A, B, Rekord E, Senator B, Tigra, Vectra A, B **SEAT:** Alhambra, Arosa, Cordoba, Cordoba Vario, Ibiza II, III, IV, IV SC, IV ST, Inca, Toledo I **SKODA:** Fabia I, Felicia I, II **VW:** Caddy II, Fox, Golf I, III, Jetta I, II, Lupo I, Passat B1, B2, B3/B4, B5, Polo, II, III, Polo III Classic, V, Sharan, Vento, LT 28-35 I, LT 40-55 I, Transporter IV **MAZDA:** Tribute **SAAB:** 90 II, 9000 **DAEWOO:** Espero, Lanos, Nexia

M 14 x 1,50

3RG: 80714
O.E.:053103663

AUDI: A4 B5 (8D2), A4 B5 Avant (8D5), A6 C4 (4A2), A6 C4 Avant (4A5), A6 C5 (4B2), A6 C5 Avant (4B5), 80 B2 Sedán, Coupé B2, 80 B3 Sedán, Coupé B3, Cabriolet B4, 80 B4 Sedán, 80 B4 Avant, 100 C3 Sedán, 100 C3 Avant, 100 C4 Sedán, 100 C4 Avant; VW: Caddy I (14), Corrado (531), Golf I (17), Golf I Cabriolet (155), Golf II, Golf III, Golf III Variant, , Golf III Cabriolet, Golf IV Cabriolet, Jetta II, Passat B2, Passat B2 Sedán, Passat B2 Variant, Passat B3/B4, Passat B3/B4 Variant, Passat B5, Passat B5 Variant, Polo III Classic, Polo Variant, Santana, Scirocco, Sharan, Vento; SEAT: Alhambra, Cordoba, Ibiza II, Inca, Toledo I

L 70 mm

3RG: 80766
O.E.: 85141181

AUDI: A2
SEAT: Arosa, Cordoba, Ibiza II, Inca
VW: Caddy II, Golf II, III, Jetta II, Lupo I, Polo, Polo Classic, Polo II, III, Polo III Classic, Vento

3RG: 80720
O.E.: 036115636

AUDI: 50, 80 B2 Sedán 80 B3 Sedán; SEAT: Cordoba, Ibiza II, Ibiza III; SKODA: Fabia I, Fabia I Combi, Fabia II, Fabia II Combi (545), Felicia (6U1), Felicia I (6U5), Roomster (5J7); VW: Fox Fastback (5z1, 5z3, 5z4), Golf I (17), Golf II (19E, 1G1), Golf III (1H1), Golf III Variant (1H5), Jettal (16), Jetta II (19E, 1G2, 165), Passat B1 (32), Passat B1 Variant (33), Passat B2, Passat B2 Variant, Passat B3/B4, Passat B3/B4 Variant, Polo (86), Polo II, Polo Classic, Polo Coupé, Vento, LT 28-35 I, LT 40-55 I, Transporter III

L 30 mm

3RG: 81760
O.E.: 191881213

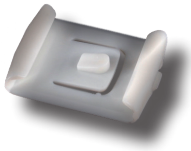

AUDI: 100 C2, 100 C3, 80 **B2, 90 B2**
SEAT: Arosa, Cordoba, Ibiza II, Toledo I
VW: Golf I, II, III, Jetta I, II, Lupo I, Passat B2, B3/B4, Polo, II, III, Polo Classic, Polo III Classic, Vento

3RG: 80009
O.E.: 028130229A

AUDI: 100 C3, 100 C4, 80 B2, 80 B3, 80 B4, 90 B3, A6 C4
CHRYSLER: Crossfire
MERCEDES: /8, 123, 124, 170, 190, Clase C, E, G, S, V, Coupe, MB, Pagode, Ponton, Pullmann, SL, Sprinter 2-t, Sprinter 3-t, Sprinter 4-t, T1, T2, Vito
SEAT: Cordoba, Ibiza II, Toledo I
SKODA: Felicia I
VW: Caddy I, Golf I, II, III, LT 28-35 I, LT 40-55 I, Passat B1, B2, B3/B4, Santana, Transporter III, IV, Vento

Ø int.3,2 - Ø ext.7,5 - L25 mm

3RG: 80747
O.E.: 030121065L

VW: Golf II, Jetta II, Polo, Polo II

3RG: 85700
O.E.: 027121065C

SEAT: Toledo I
VW: Golf II, Jetta II

3RG: 85701
O.E.: 027121065D

VW: Golf II, Jetta II, Passat B3/B4

ORIGINAL PRODUCTS 3RG SPAIN

3RG: 80741
O.E.: 055121121F

AUDI: 100 C2, 100 C3, 80 B2, 90 B2, 90 B3,
VW: Golf I, Iltis, Jetta I

3RG: 80743
O.E.: 030121121B

AUDI: A6 C5, Cabriolet B3
SEAT: Cordoba, Ibiza II
VW: Passat B5,
Polo Classic, Polo, II,
Transporter III

3RG: 82753
O.E.: 048103772

AUDI: 100 C4, 80 B3, 80 B4
SEAT: Cordoba, Ibiza II,
Toledo I
VW: Golf II, III,
Passat B3/B4

3RG: 80724
O.E.: 037121145

AUDI: 80 B2, 80 B3, A6 C5, Coupe B3
SEAT: Alhambra, Cordoba
VW: Cady I, II, Golf II, III, Jetta II, Passat B2, B3/B4, Polo, Scirocco, Sharan

3RG: 80725
O.E.: 037121132B

AUDI: 100 C4
VW: Passat B3/B4

3RG: 80742
O.E.: 037121133C

VW: Golf II, Jetta, Corrado

3RG: 82739
O.E.: 037121132A

AUDI: 100 C4, 80 B3, Coupe B3
SEAT: Toledo I
VW: Caddy I, Corrado, Golf I, II, Jetta II, Passat B3/B4, Scirocco, Transporter IV,

3RG: 82711
O.E.: 027121133E

SEAT: Toledo I
VW: Golf II, Jetta II, Passat B3/B4

3RG: 82732
O.E.: 027121145B

VW: Golf II, Jetta II, Passat B3/B4

3RG: 82733
O.E.: 030121117C

VW: Golf II, Jetta II, Polo II

3RG: 82700
O.E.: 068121132

VW: Passat B3/B4

3RG: 82798
O.E.: 068121132 + 357121140

VW: Passat B3/B4

3RG: 82755
O.E.: 068121133M

AUDI: 80 B2
VW: Golf I, Jetta I, II,
Passat B2, Transporter III

3RG: 82710
O.E.: 026121144F

AUDI: 100 C3, 80 B2, 80 B3, Coupe B2, B3
SEAT: Alhambra, Cordoba, Ibiza II, Toledo I
VW: Corrado, Golf III, IV, Passat B2, B3/B4, Sharan, Vento

3RG: 82734
O.E.: 030121117D

VW: Derby, Golf II, Jetta II, Polo Classic, Polo, II

ORIGINAL PRODUCTS 3RG SPAIN

3RG: 82735
O.E.: 030121117M

VW: Golf II, Jetta II, Polo Classic, Polo, Polo II

3RG: 81706
O.E.: 030121117L

SEAT: Ibiza II
VW: Polo, Polo II

3RG: 80000
O.E.:

UNIVERSAL

9,3 x 19 mm.

3RG: 80001
O.E.:

41 x 51 mm.

CITROËN DIESEL
PEUGEOT DIESEL
VOLKSWAGEN DIESEL
RENAULT DIESEL
MERCEDES DIESEL
(OM15/616-220CV)
FIAT DIESEL

3RG: 80004
O.E.: 068198821A

L. 51 mm.

CITROËN DIESEL
PEUGEOT DIESEL
RENAULT DIESEL
VOLKSWAGEN DIESEL
FIAT DIESEL
MERCEDES DIESEL
(OM15/ 616-220CV)

3RG: 80005
O.E.: 068198821A

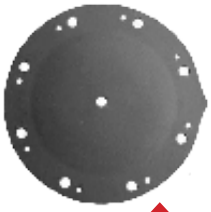

Ø 105 mm.

MEMBRANA SOLA
MEMBRANE SEULE
MEMBRAN ONLY

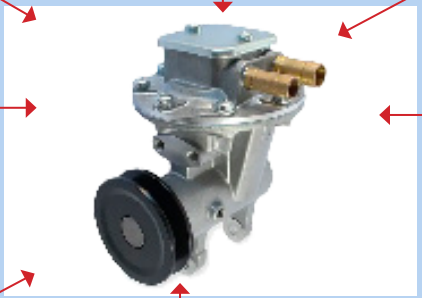

3RG: 80003
O.E.: 068198821A

Ø 105 mm.

VOLKSWAGEN

Equivalent

3RG: 80006
O.E.:

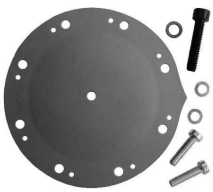

Ø 105 mm.

CITROËN DIESEL
PEUGEOT DIESEL
RENAULT DIESEL
FIAT DIESEL
MERCEDES DIESEL
(OM15/616-220CV)

Equivalent

3RG: 80002
O.E.: 15860743

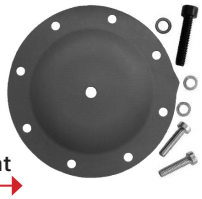

Ø 105 mm.

CITROËN DIESEL
PEUGEOT DIESEL
RENAULT DIESEL
MERCEDES DIESEL
3RG: 80002 FIAT
DIESEL

ORIGINAL PRODUCTS 3RG SPAIN

3RG: 81729
O.E.: 191201551

ALFA ROMEO: 156, 164, 166, Arna GTV, Spider **AUDI:** 100 C3, 100 C4, 200 C3, 80 B3, 80 B4, 90 B3, A1, A2, A3, A4 B5, A4 B6, A6 C4, A6 C5, A8 D2, A8 D3, Allroad C5, Cabriolet B3, Coupe B3, Quattro, R8, TT, V8 **BUIK:** Century , Electra **CHEVROLET:** Blazer **CHRYSLER:** 300M, LE BARON, Neon, Startus, Vision, Voyager/Grand Voyager III, Voyager II **CITROËN:** C1, II **PEUGEOT:** 107, 108 **DAEWOO:** Espero **DAIHATSU:** Applause I, Charade I, II, III, Charmant, Cuore II, Feroza, Materia, Rocky, Sirion, Terios, Trevis **FIAT:** Barchetta, Palio, Sedici, Strada **FORD:** Fiesta V, Focus U, Fusion, Maverick, Mondeo I, II, III, Scorpio II **HONDA:** Accord IV, V, VI, Civic V, VI, CR-VI, CRX III, Integra, Legend II, III, NSX I, Prelude IV, V, Shuttle **HYUNDAI:** Accent I, II, III, IV, Atos, Coupe, Elantra III, Galloper II, Genesis, Getz, Grand Santa Fé, H-1/Starex, i10 I, II, i20, I, II, i30, i40 I, Lantra, I, II, Matriz, Pony, Santa Fé I, II, III, Santamo, Sonata II, III, IV, Terracan, Trajet, XG **ISUZU:** Piazza, Trooper I, II, III **JEEP:** Cherokee, Grand Cherokee I, II, Wrangler II **KIA:** CEE'D, Cerato I, Clarus, Picanto, Pride, Pro CEE'D, Rio, II, III, Sephia, Shuma I, Sorento I, Soul I, II, Sportage SUV, Venga **LADA**: 110, 111, 112, Samara **LANCIA:** Kappa, Kappa SW **LAND ROVER:** Defender, Discovery I, II, III, Rnage Rover II, III **LEXUS:** GS, LS **MAZDA:** 121 I, II, 2, 3, 323 C IV, V, 323 F IV, V, 323 I, II, III, 323 P V, 323 S VI, 5, 6, 616, 626 I, II, II, IV, V, 929 I, II, III, CX3, CX5, CX7, Demio, MPV I, II, MX3, MX5 I, II, III, MX 6, RX7 I, II, III, RX 8 **MITSUBISHI:** 3000 GT, ASX, Carisma, COLT CZC VI, Colt I, II, III, IV, V, VI, Eclipse I, II, Galant IV, V, VI, VII, VIII, Grandis, L200, Lancer II, III, IV, V, VI, Outlander I, III, Pajero Classic, Pajero I, II, III, Pajero Pinini I, Pajero Sport I, Sapporo I, II, III, Space Runner, Space Star, Space Wagon, Starion, Tredia **NISSAN:** 100NX, 20SX, 280ZX, ZXT, 300ZX, 250Z, Almera I, II, Bluebird, Cherry, II, III, Cherry II, III, Datsun 100A, Juke, Laurel, Maxima, Micra i, ii, Note, Pathfinder III, Patrol GR IV, V, Patrol III, Pick up, Pixo, Prairie, Primera, Pulsar, Qashqai, Serena, Silvia, Stanza, Sunny, I, II, III, Terrano I, II, XTrauil **OPEL:** Adam, Agila, Astra FM G, H, Cscada, Combo, Corsa B, C, D, Frontera B, Insignia A, Karl, Meriva A, Mokka, Mokka X, Omega B, Tigra, Vectra B, Zafira A, Zafira Famili B **PONTIAC:** Trans Sport **PORCHE:** 911, 924, 944 **RENAULT:** 21, Kadjar, Koleos I **ROVER:** 400 II, 45 I, 600 I, 75, I SAAB: 9-3, 9-5, 900 I, II, 9000 **SEAT:** Altea, Altea XL, Arosa, Cordoba, Exeo, Exeo ST, Ibiza II, III, IV, IV SC, IV ST, Leon, Mii, Toledo I, II **SKODA:** Citigo, Fabia I, Felicia I, II, Octavia I, II, Rapid, Roomster, Superb I, II, Yeti **SMART:** Cabrio, City, Fortwo **SANGYONG:** Korando, Musso **SUBARU:** Foresterm, Impreza, Justy I, Legacy I, II, III, Outback, Rex II, SVX, Vivio **SUZKI:** Alto IV, Baleno, Grand Vitara I, Ignis I, Jumny, Liana, Swift, I, II, SX4, Vitara, Wagon **TOYOTA:** 4 Runner II, Auris, Avensis, Aygo, Camry, Carina E VI, Carina II, III, IV, V, Celicia, Corolla, Cressida, Crown, Hilux IV, V, VI, Land Cruiser, MR 2 I, II, Paseo, Previa I, II, RAV 4 I, II, Starlet, Supra, Tercel, Yaris **VAUXHALL:** Meriva A **VOLVO:** 240, 260, 440, 460, 480, 740, 760, 780, 850, 940, II, 960, II, C70 I, S40 I, S60 I, S70, S80 I, S90 I, V40, V60 I, V90 I, XC60 I SUV, XC 70 II, XC 90 I **VW:** Amarok, Bora, Bora I, Caddy II, Corrado, Derby, Fox, Golf II, III, IV, V, Jetta I, II, Lupo I, Multivam V, New Beetle, Passat B3/B4, B5, B5.5, Phaeton, Polo, Polo Classsic, Polo, II, III, IV, V, Taro, Touareg, UP, Vento

3RG: 80131
O.E.: 11341288544

8 pcs.

Ø int. 7 mm

ALFA ROMEO: 145, 146, 147, 155, 156, 164, 166, 33, GT, GTV, Spider **AUDI:** 100 C4, 200 C3, 80 B3, 80 B4, 90 B3, A2, A3, A4 B5, A4 B6, A4 B7, A6 C4, A6 C5, A8 D2, Cabriolet B3, Coupe B3, Quattro, V8 **AUTOBIANCHI:** A112, Y10 **BERTONE:** Freeclimber, Freeclñimber 2 **BMW:** 3 (E21, E30, E36, E46), 5 (E12, E28, E34, E39), 6 (E24), 7 (E32. E38), 8 (E31), M1 (E26), Z1, Z3 **CITROËN:** AX, Berlingo/Berlingo First, BX, C15, C2, C2 Enterprise, C3 I, II, Jumper, Nemo, Saxo, Xantia, XM, Xsara, Xsara Picasso, ZX **DACIA:** Dokker, Lodgy, Logan, Logan Express, Logan MCV, Sandero, Solenza **FIAT:** 127, 900 T, Barchetta, Brava, Bravo I, Cinquecento, Coupe, Croma, Doblo, Fiorino, Marea, Multipla, Palio, Panda, Punto, Qubo, Seicento/600, Siena, Stilo, Strada, Tipo, Uno **FORD:** Galaxy I, Scorpio I, II **FSO:** 127P **GINETTA:** G34 **LADA:** 110, 111, 112 **LANCIA:** A112, Dedra, Dedra SW, Delta I, II, Kappa, Kappa SW, Lybra SW, Thema, Thema SW, Thesis, Y(840), Y10 (156), Ypsilon **MASERATI:** 228, Biturbo, Karif, Quattroporte IV, Spyder **MEGA:** Club, II **MERCEDES:** Clase V **MITSUBISHI:** Carisma, Space Star **NISSAN:** Interstar, Micra II, Primastar, Primera **OPEL:** Movano, Vivaro A **PEUGEOT:** 1007, 106 I, II, 205, I, II, 206, 206 SW, 206+, 207, 207 SW, 306, 307, 307 SW, 309, I, II, 405 I, II, 605, Bipper, Bipper Tepee, Boxer, Partner **PORCHE:** 928, 944, 959, 968 **RENAULT:** 19 I, II, 21, 25, Clio I, II, Espace III, IV, Grand Scénic II, III, Kangoo, Kangoo/Grand Kangoo II, Laguna I, II, Logan I, Logan/Stepway II, Master II, Megane CC, Megane I, II, II, Rapid, Safrane I, II, Scénic I, II, III, Sport Spider, Thalia II, Trafic II **ROLLS-ROYCE:** Silver **ROVER:** 100/Metro **SAAB:** 9-3, 900 I, II, 9000 **SEAT:** 127, Alhambra, Altea, Altea XL, Arosa, Cordoba, Fura, Ibiza I, II, III, IV, IV SC, Inca, Leon, Malaga, Marbella, Panda, Ronda, Terra, Toledo I, II, III **SKODA:** 130, Fabia I, II, Favorit, Felicia I, II, Octavia I, II, Roomster, Superb I, II **SUZUKI:** Grand Vitara II **VOLVO:** 740, 940, 960, S40 I, V40 **VW:** Bora, Bora I, Caddy II, III, Corrado, Eos, Fox, Golf II, III, IV, Golf Plus V, V, Golf Van IV, Jetta II, III, IV, Lupo I, mULTIVAN v, New Beetle, Passat B3/B4, B5, B5.5, B6, Phaeton, Polo, Polo Classic, Polo, II, III, Polo III Classic, IV, Scirocco, Sharan, Touareg, Touran, Transporter IV, V, Vento **YUGO:** Tempo **ZASTAVA:** Koral, Yugo

3RG: 80133
O.E.: 11349059170

8 pcs.

Ø int. 8 mm

ARO: 10 **AUDI:** 100 C2, 100 C3, 100 C4, 200 C2, 200 C3, 50, 80 B1, 80 B2, 80 B3, 80 B4, 90 B2, 90 B3, A4 B5, A6 C4, A6 C5, A8 D2, Cabriolet B3, Coupe B2, B3, Quattro **BMW:** 1500-2000, 4502-2002, 1600 GT, 2.5-3.2, 2000, 2500-3.3, 3 (E21, E30), 5 (E12, E28, E34), 6 (E24), 7 (E32) **CITROËN:** AX, Berlingo/Berlingo First, Jumper, Jumpy, Xantia, Xsara, ZX **FIAT:** 124, 125, 127, 128, 131, 147, Croma, Duna, Elba, Fiorino, Palio, Premio, Ritmo, Uno, X1/9 **FORD:** Galaxy I **FSO:** 126P **INNOCENTI:** Elba **LADA:** 110, 111, 112, 1200-1500, 1200-1600, Nadeschda, Niva, Nova, Samara, Toscana **LANCIA:** Beta, Delta I, Trevi **OPEL:** Astra H, H GTC, Signum, Vectra C, C GTS, Zafira/Zafita Family B **PEUGEOT:** 205 II, 206, 306, 405 II, 406, 806, Boxer, Expert, Partner **RENAULT:** 19 II, Clio I, II, Espace II, III, Kangoo, Kangoo Express, Laguna I, Megane I, Trafic **SAAB:** 9-3 **SEAT:** 124, 128, 131, Alhambra, Cordoba, Ibiza II, Inca, Ritmo, Terra, Toledo I **SKODA:** Felicia I **SUZUKI:** SX4 **TRABANT:** 1.1, 1.1 Tramp, 1.1 Universal **VOLVO:** 240, 740, 760, 780, 850, 940, II, 960, S70, S80 I, V70 I, II **VW:** Caddy I, II, Corrado, Xrafter 30-35, Derby, Golf I, II, III, IV, Iltis, Jetta I, II, LT 28-35 I, II, LT 28-46 II, LT 40-55 I, Passat B1, B2, B3/B4, Polo, Polo Classic, Polo II, III, Polo III Classic, Santana, Scirocco, Sharan, Transporter III, IV, Vento **WARTBURG:** 353 **ZASTAVA:** 101, Yugo

ORIGINAL PRODUCTS 3RG SPAIN

3RG: 80015 Ø 12 x 17
3RG: 80016 Ø 14 x 20
3RG: 80017 Ø 16 x 22
3RG: 80018 Ø 18 x 24
3RG: 80019 Ø 19 x 25
3RG: 80020 Ø 20 x 26
3RG: 80021 Ø 22 x 28
3RG: 80022 Ø 26 x 32

3RG: 80043 Ø 12 x 17
3RG: 80044 Ø 14 x 20
3RG: 80045 Ø 16 x 22
3RG: 80046 Ø 18 x 24
3RG: 80047 Ø 19 x 25
3RG: 80048 Ø 20 x 26
3RG: 80048 Ø 22 x 28
3RG: 80050 Ø 26 x 32

3RG: 80023 Ø 8
3RG: 80024 Ø 10
3RG: 80025 Ø 12
3RG: 80026 Ø 14
3RG: 80027 Ø 16
3RG: 80028 Ø 18
3RG: 80029 Ø 21
3RG: 80030 Ø 23
3RG: 80031 Ø 26

ORIGINAL PRODUCTS
3RG SPAIN

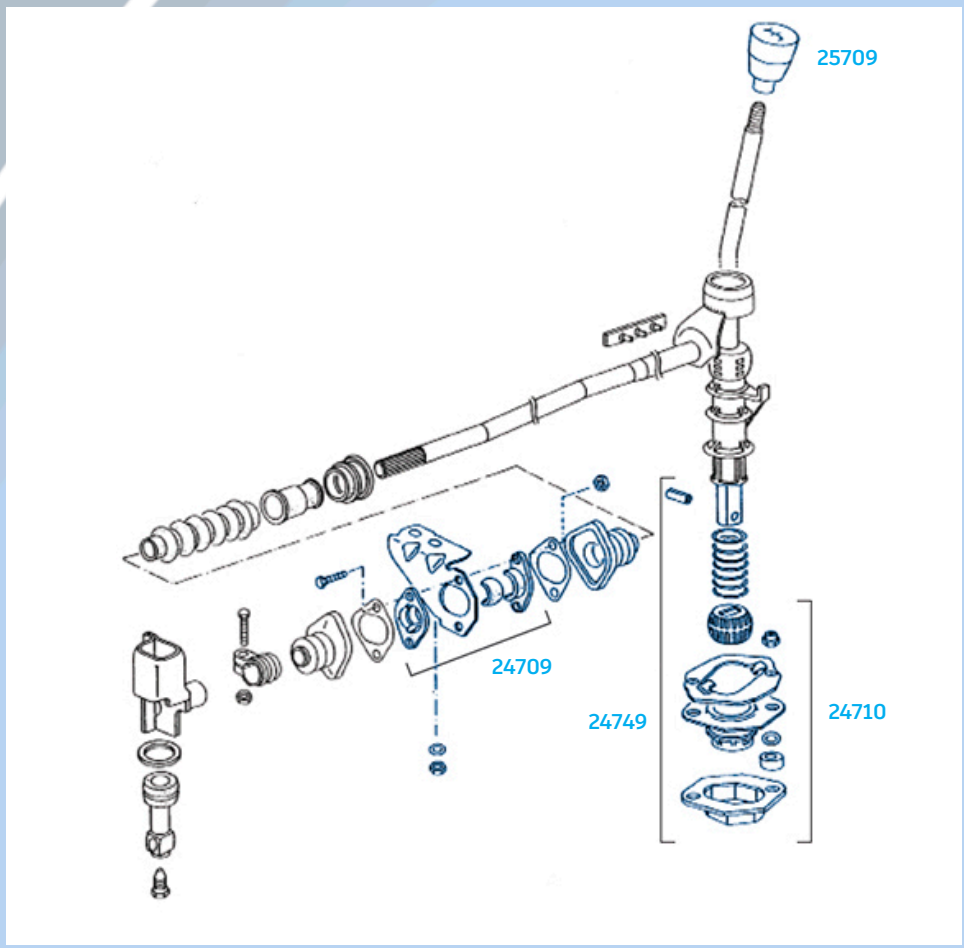

3RG: 24710
O.E.: 191798116A

SEAT: Cordoba, Ibiza II, Inca, Toledo I
VW: Caddy II, Golf I, Golf II, Golf III, Jetta I, Jetta II, Polo II, Polo Classic, Polo, Polo III, Vento

3RG: 24749
O.E.: 191798116A

SEAT: Cordoba, Iboza II, Inca, Toledo I
VW: Caddy II, Golf I, Golf II, Golf III, Jetta I, Jetta II, Polo II, Polo Classic, Polo, Polo III, Vento

3RG: 24709
O.E.: 803711191B

VW: Caddy I, Golf I, Golf II, Golf III, Iltis, Jetta I, Jetta II, Passat B2, Scirocco

3RG: 25709
O.E.: 191711141

VW: Caddy I, Golf I, II, Jetta I, II, Passat, Polo, Polo Classic, Santana, Scirocco

3RG: 24707
O.E.: 171798211

VW: Caddy I, Golf I, Jetta I, Scirocco

ORIGINAL PRODUCTS 3RG SPAIN

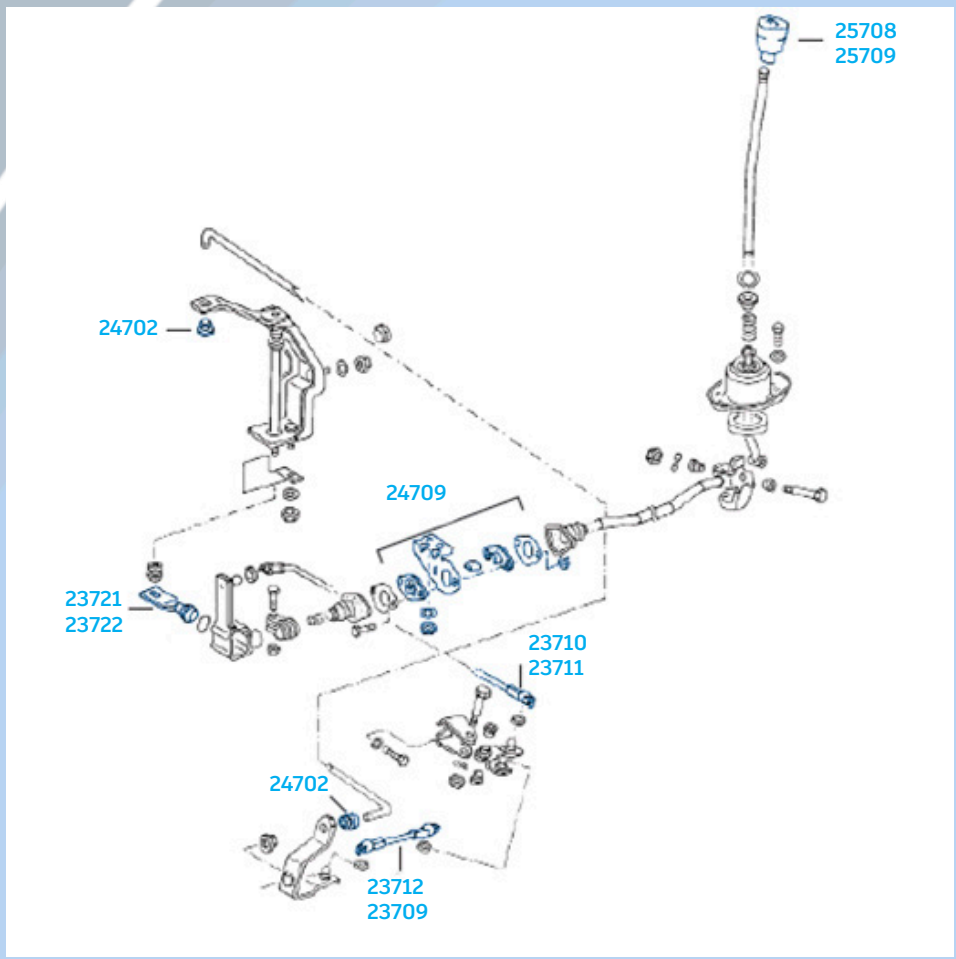

3RG: 25708
O.E.: 191711141B

VW: Corrado, Golf I, II, Jetta I, II, Passat, Polo, Polo Classic, Scirocco

3RG: 25709
O.E.: 191711141

VW: Caddy I, Golf I, II, Jetta I, II, Passat, Polo, Polo Classic, Santana, Scirocco

3RG: 24702
O.E.: 171711181

SEAT: Cordoba, Ibiza II, Inca, Toledo I
VW: Caddy II, Golf I, Golf II, Golf III, Jetta I, Jetta II, Polo III Classic, Polo, Vento, Transporter IV

3RG: 23721
O.E.: 171711163E

VW: Caddy I, Golf I, Jetta I, Scirocco

Ø 30

3RG: 23722
O.E.: 171711163D

VW: Caddy I, Golf I, Jetta I, Scirocco

Ø 24

3RG: 24709
O.E.: 803711191B

VW: Caddy I, Golf I, Golf II, Golf III, Iltis, Jetta I, Jetta II, Passat B2, Scirocco

3RG: 23710
O.E.: 171711593D

VW: Caddy I, Golf I, Jetta I, Scirocco

3RG: 23712
O.E.: 171711574A

VW: Caddy I, Golf I, Jetta I, Scirocco

3RG: 24707
O.E.: 171798211

VW: Caddy I, Golf I, Jetta I, Scirocco

3RG: 23709
O.E.: 171711574B

VW: Caddy I, Golf I, Jetta I, Scirocco

3RG: 23711
O.E.: 171711593E

VW: Caddy I, Corrado, Golf I, Jetta I, Scirocco

ORIGINAL PRODUCTS 3RG SPAIN

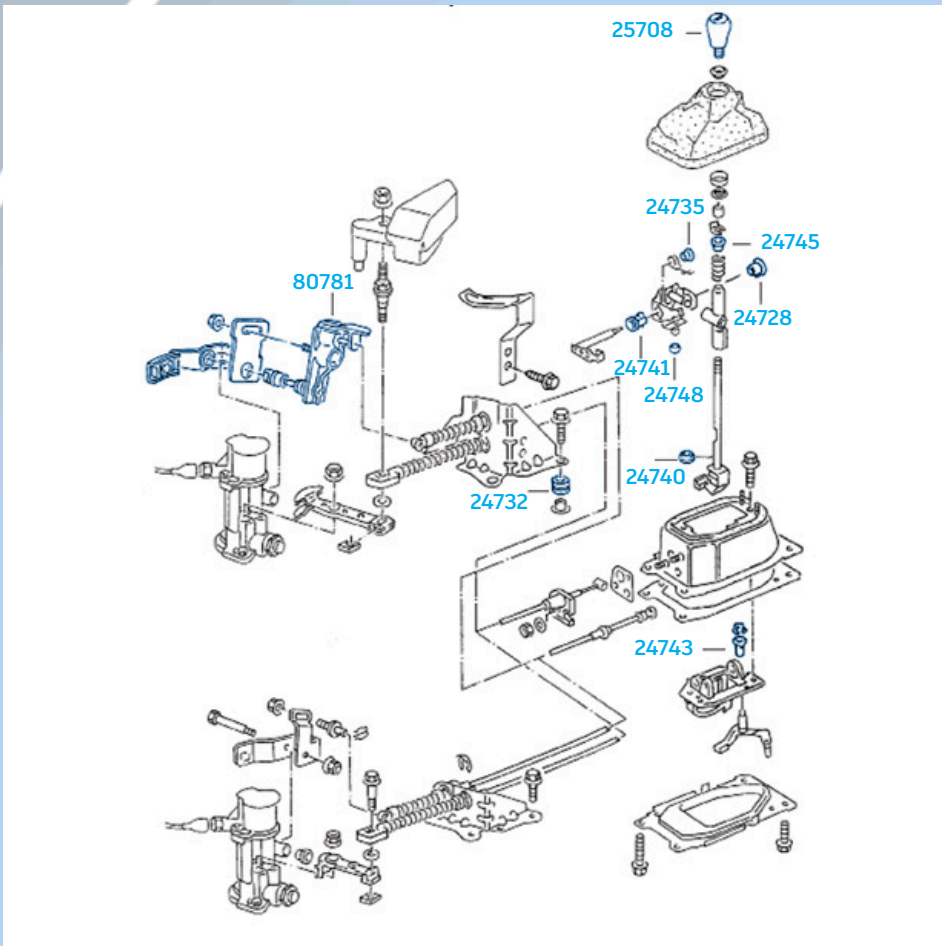

3RG: 25708
O.E.: 191711141B

VW: Corrado, Golf I, II, Jetta I, II, Passat, Polo, Polo Classic, Scirocco

3RG: 24735
O.E.: 357711124A

AUDI: A3
SEAT: Arosa, Cordoba, Ibiza II, Leon, Toledo I, Toledo II
SKODA: Octavia I
VW: Bora I, Bora, Caddy II, Golf II, Golf III, Golof IV, Lupo I, New Beetle, Passat B3/B4, Polo III, Polo, Vento

3RG: 24743
O.E.: 357711166A

SEAT: Cordoba, Ibiza II, Toledo I
VW: Golf III, Passat B3/B4, Polo, Vento

3RG: 24745
O.E.: 357711217

AUDI: A3
SEAT: Arosa, Cordoba, Ibiza II, Leon, Toledo I, Toledo II
SKODA: Octavia I
VW: Bora I, Bora, Caddy II, Golf II, Golf III, Golof IV, Lupo I, New Beetle, Passat B3/B4, Polo III, Polo, Vento

3RG: 24741
O.E.: 357711590B

SEAT: Arosa, Cordoba, Ibiza II, Toeldo I
VW: Golf II, Golf III, Lupo I, Passat B3/B4, Polo III, Polo, Vento

3RG: 24728
O.E.: 357711590C

AUDI: A3
SEAT: Arosa, Cordoba, Ibiza II, Leon, Toledo I, Toledo II
SKODA: Octavia I
VW: Bora I, Bora, Caddy II, Golf II, Golf III, Golf IV, Lupo I, New Beetle, Passat B3/B4, Polo III, Polo III Classic, Polo, Vento

3RG: 24748
O.E.: 357711164

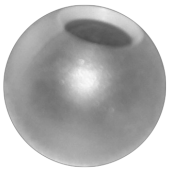

AUDI: A3
SEAT: Arosa, Cordoba, Ibiza II, Leon, Toledo I, Toledo II
SKODA: Octavia I
VW: Bora I, Bora, Caddy II, Golf II, Golf III, Golof IV, Lupo I, New Beetle, Passat B3/B4, Polo III, Polo III Classic, Polo, Vento

3RG: 24740
O.E.: 357711901A

AUDI: A3, Q7
SEAT: Alhambra, Arosa, Cordoba, Ibiza II, Ibiza III, Leon, Toledo I, Toledo II
SKODA: Fabia I
VW: Bora I, Bora, Caddy II, Golf III, Golf IV, Lupo I, New Beetle, Passat B3/B4, Polo III, Polo, Polo IV, Sharan, Touareg, Vento

3RG: 80781
O.E.: 1J0711256

AUDI: A3
SEAT: Cordoba, Leon, Toledo I, Toledo II
SKODA: Octavia I
VW: Bora I, Golf IV, New Beetle, Passat B3/B4, Polo III Classic, Polo

ORIGINAL PRODUCTS 3RG SPAIN

3RG: 24732
O.E.: 357711798

AUDI: A1, A2. A3, Q3, TT
SEAT: Alhambra, Altea, Altea XL, Arosa, Cordoba, Ibiza II, Ibiza III, Ibiza IV, Ibiza IV SC, Ibiza IV ST, Leon, Toledo I, Toledo II, Toledo III, Toledo IV
SKODA: Fabia I, Fabia II, Octavia I, Octavia II, Roomster, Superb II, Yeti
VW: Beetle, Bora I, Bora, Caddy II, Caddy III, Eos, Fox, Golf III, Golf IV, Golf V, Golf VI, Golf Plus V, Jetta III, Jetta IV, Lupo I, New Beetle, Passat B3/B4, Passat B6, Passat B7, Passat Alltrack B7, Polo III Classic, Polo, Sharan, Tiguan, Touareg, Touran, Vento, Multivan V, Transporter V

Ref. 3RG: 24759
O.E.: 357711798

∅ int. 13-∅ ext. 25-L14

3RG: 24763
O.E.:

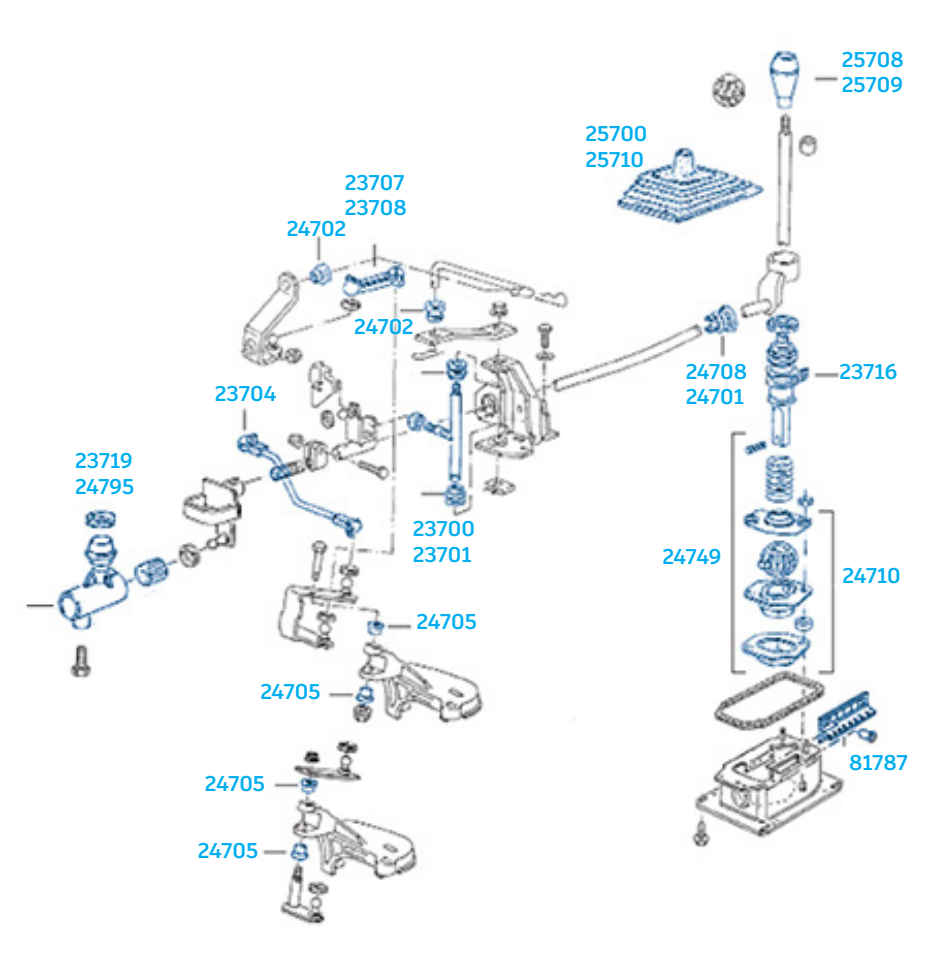

3RG: 24710
O.E.: 191798116A

SEAT: Cordoba, Ibiza II, Inca, Toledo I
VW: Caddy II, Golf I, Golf II, Golf III, Jetta I, Jetta II, Polo II, Polo Classic, Polo, Polo III, Vento

3RG: 24749
O.E.: 191798116A

SEAT: Cordoba, Ibiza II, Inca, Toledo I
VW: Caddy II, Golf I, Golf II, Golf III, Jetta I, Jetta II, Polo II, Polo Classic, Polo, Polo III, Vento

3RG: 25708
O.E.: 191711141B

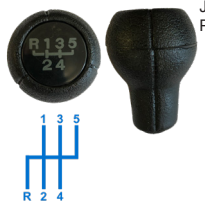

VW: Corrado, Golf I, II, Jetta I, II, Passat, Polo, Polo Classic, Scirocco

3RG: 23716
O.E.: 191711116C

SEAT: Toledo
VW: Golf II, Jetta II

3RG: 25700
O.E.: 191711115C

VW: Golf II, Jetta II

3RG: 25709
O.E.: 191711141

VW: Caddy I, Golf I, II, Jetta I, II, Passat, Polo, Polo Classic, Santana, Scirocco

3RG: 24706
O.E.: 191798211S

SEAT: Toledo I
VW: Transporter IV

3RG: 24707
O.E.: 171798211

VW: Caddy I, Golf I, Jetta I, Scirocco

3RG: 23700
O.E.: 191711173B

SEAT: Toledo I
VW: Golf II, Jetta II

ORIGINAL PRODUCTS 3RG SPAIN

3RG: 23701
O.E.: 191711173B

SEAT: Toledo I; **VW:** Golf II, Jetta II

3RG: 24702
O.E.: 171711181

SEAT: Cordoba, Ibiza II, Inca, Toledo I
VW: Caddy II, Golf I, Golf II, Golf III, Jetta I, Jetta II, Polo III Classic, Polo, Vento, Transporter IV

3RG: 24705
O.E.: 191711590A

SEAT: Cordoba, Ibiza II, Inca, Toledo I
VW: Caddy II, Golf II, Golf III, Jetta II, Polo III Classic, Polo, Vento

3RG: 24708
O.E.: 191711190B

SEAT: Arosa, Cordoba, Ibiza II, Inca, Toeldo I
VW: Caddy II, Golf I, Golf II, Golf III, Jetta II, Lupo I, Polo II, Polo Classic, Polo III, Polo III Classic, Polo, Vento

3RG: 24701
O.E.: 191711208A

SEAT: Toledo I; **VW:** Golf II, Jetta II, Transporter IV

3RG: 23704
O.E.: 191711574

SEAT: Toledo I; **VW:** Golf II, Jetta II

3RG: 23707
O.E.: 191711595

VW: Golf II, Jetta II

3RG: 23708
O.E.: 191711595A

SEAT: Cordoba, Ibiza II, Toledo I
VW: Golf II, Jetta II

3RG: 81787
O.E.: 191711146C

SEAT: Cordoba, Ibiza II, Inca, Toledo I
VW: Caddy II, Golf II, III, Jetta II, Polo III Classic, Polo, Vento

3RG: 25710
O.E.: 191711115

VW: Golf II, Jetta II

3RG: 23719
O.E.: 191711233

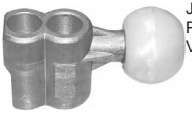

SEAT: Cordoba, Ibiza II, Inca
VW: Caddy II, Golf II, Golf III, Jetta II, Polo II, Polo Classic, Polo, Polo III, Polo III Clasic, Vento

3RG: 24795
O.E.: 1K0711699

SEAT: Cordoba, Ibiza II, Inca
VW: Caddy II, Golf II, Golf III, Jetta II, Polo II, Polo Classic, Polo, Polo III, Polo III Clasic, Vento

ORIGINAL PRODUCTS 3RG SPAIN